HELUKABEL®

Automotive Industry & Plant Construction

POTENTIAL EARTHING CONCEPTS

Ed. 2 // EN

Channeling POWER

Potential Earthing Concept

Earthing and potential equalisation are becoming increasingly important in industrial applications. The reason for this is that more and more machines and systems are working side by side in a very confined space, which means that their electromagnetic fields influence each other. To prevent electromagnetic compatibility (EMC) interference, HELUKABEL offers you a wide range of solutions that you can implement a customised and functional earthing and equipotential bonding concept with little installation effort.

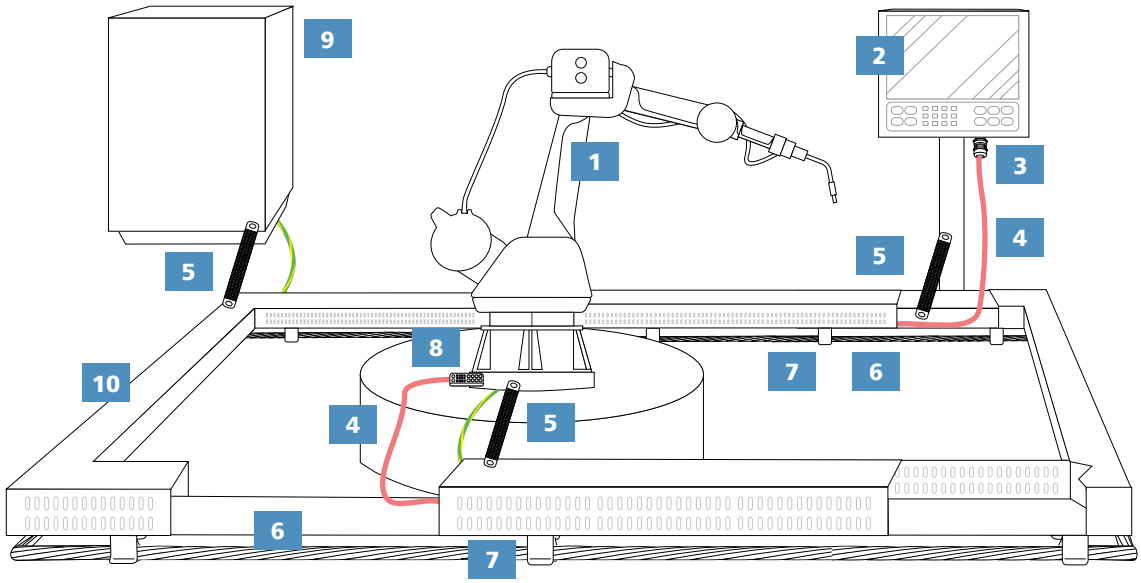

Ethernet with 2 or 4 pairs:

1 Robot
2 Control panel
3 EMC cable gland
4 H07V-K / 07V-K
5 Copper strap
6 HELUPOWER® CU-CONDUCTOR-CL2 / CL5 TINNED
7 Earthing socket HED-300
8 PROFInet device
9 Switch cabinet
10 Cable duct

EARTHING & EMC ACCESSORIES

In OEM approval process

OEM listed

Quick Mount Earthing Socket HED-300

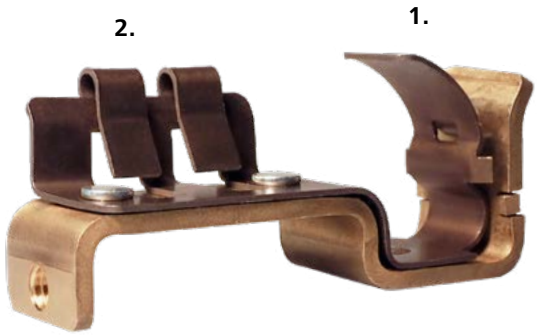

Part no. 11025447

We reserve the right to make technical changes; product image is purely exemplary

Specifications

- Material: Copper
- Successfully tested according to DIN EN 60947-7-2 (VDE 0611-3):2010-03; EN 60947-7-2:2009
- Clamping range **1**: 16 - 25 mm² with conductor cl. 5
- Clamping range **2**: 6- 16 mm²
- Weight: approx. 60 g
- Dimensions (height, width, depth): approx. 70 mm, approx. 20 mm, approx. 30 mm
- Mounting on two M6 threads (horizontal and vertical)

Applications

- Automobile industry
- Robotic systems
- for fast and resource-saving fastening of earthing and equipotential bonding cables to the cable support system
- Horizontal and vertical mounting possible, can be used independently of the channel

HELUPOWER® CU-CONDUCTOR-CL2 TINNED / HELUPOWER® CU-CONDUCTOR-CL5 TINNED

OEM listed

Class 2 Part no.	Class 5 Part no.	Cross section mm²	Outer-Ø mm	Cu nom. kg/km	Weight kg/km
11008930	11008942	6	3,1	58	58
11008931	11008540	10	4,0	96	96
11008932	11008541	16	5,1	154	154
11008933	11008943	25	6,3	240	240
11008934	11008944	35	7,5	336	336
11008935	11008945	50	9,0	480	480
11008936	11008946	70	10,8	672	672
11008937	11008947	95	12,8	912	912
11008938	11008948	120	14,1	1152	1152
11008939	11008949	150	15,8	1440	1440
11008940	11008950	185	17,5	1776	1776
11008941	11008951	240	20,1	2304	2304

Technical data

- Minimum bending radius: fixed installation, 6x outer Ø

Cable structure

- Tinned copper conductor, stranded acc. to DIN VDE 0295 class 2
- Tinned copper wire, finely stranded acc. to DIN VDE 0295 class 5, rope stranded

Application areas

- Earthing machines / systems with corrosion protection
- Protective equipotential bonding in CBN ring-conductor systems (CBN = common bonding network), e.g. in the automotive industry
- Concentrically stranded construction improves mechanical properties: more flexible, consistent diameter and compact structure
- Fastening on/in the cable duct using terminal blocks, terminals or clamp springs

CU-Earthing strap

OEM listed

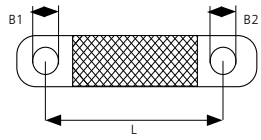

Technical data

- Temperature range: -20°C to +125°C
- Individual wire thickness: 0,2 mm
- Contacts made of seemless pressed ferrules
- Material: Copper, tinned

Application areas

- For EMC applications (interference elimination)
- Rounded contacts
- Automotive industry
- Robot plants
- Switch cabinet construction

Note

- **Available in other lengths & sizes upon request**

Part no.	Description HELU-MB-CUv-	nom. cs. mm²	Length L mm	Hole size mm B1/ B2
11008412	-6-150-4,5/6,5-R	6	150	4,5 / 6,5
11008415	-6-300-6,5/6,5-R	6	300	6,5 / 6,5
11018291	-6-150-6,5/6,5-R	6	150	6,5 / 6,5
11008411	-6-500-6,5/6,5-R	6	500	6,5 / 6,5
11008413	-6-200-8,5/8,5-R	6	200	8,5 / 8,5
11008421	-10-200-6,5/6,5-R	10	200	6,5 / 6,5
11017752	-10-200-6,5/8,5-R	10	200	6,5 / 8,5
11008423	-10-300-6,5/6,5-R	10	300	6,5 / 6,5
11017753	-10-300-6,5/8,5-R	10	300	6,5 / 8,5
11008422	-10-200-8,5/8,5-R	10	200	8,5 / 8,5
11008424	-10-300-8,5/8,5-R	10	300	8,5 / 8,5
11008425	-10-400-8,5/8,5-R	10	400	8,5 / 8,5
11017610	-10-500-8,5/8,5-R	10	500	8,5 / 8,5
11021421	-16-150-6,5/6,5-R	16	150	6,5 / 6,5
11008443	-16-200-6,5/6,5-R	16	200	6,5 / 6,5
11008445	-16-200-6,5/8,5-R	16	200	6,5 / 8,5
11008446	-16-250-6,5/8,5-R	16	250	6,5 / 8,5

Part no.	Description HELU-MB-CUv-	nom. cs. mm²	Length L mm	Hole size mm B1/ B2
11008444	-16-300-6,5/6,5-R	16	300	6,5 / 6,5
11008447	-16-300-6,5/8,5-R	16	300	6,5 / 8,5
11008442	-16-100-8,5/8,5-R	16	100	8,5 / 8,5
11008450	-16-1200-8,5/8,5-R	16	1200	8,5 / 8,5
11017281	-16-150-8,5/8,5-R	16	150	8,5 / 8,5
11008378	-16-200-8,5/8,5-R	16	200	8,5 / 8,5
11017273	-16-300-8,5/10,5-R	16	300	8,5 / 10,5
11008379	-16-300-8,5/8,5-R	16	300	8,5 / 8,5
11017756	-16-400-8,5/6,5-R	16	400	8,5 / 6,5
11017286	-16-450-8,5/10,5-R	16	450	8,5 / 10,5
11008448	-16-500-8,5/8,5-R	16	500	8,5 / 8,5
11008449	-16-600-8,5/8,5-R	16	600	8,5 / 8,5
11008461	-25-200-8,5/8,5-R	25	200	8,5 / 8,5
11008462	-25-300-8,5/8,5-R	25	300	8,5 / 8,5
11017762	-25-500-8,5/8,5-R	25	500	8,5 / 8,5
11009170	-35-500-8,5/8,5-R	35	500	8,5 / 8,5
11009219	-50-300-10,5/10,5-R	50	300	10,5 / 10,5

SINGLE CORE PRODUCT RANGE

H07V-K / 07V-K

PVC single core, finely stranded

OEM listed

Rose Part no.	Green-yellow Part no.	No. cores x nom. cross-sec. mm²	Outer-Ø mm	Cu no. kg/km
100 m Coil in cardboard				
29138	29130	1 x 1,5	2,8 - 3,4	14,4
29154	29146	1 x 2,5	3,4 - 4,1	24,0
29170	29162	1 x 4	3,9 - 4,8	38,0
29186	29178	1 x 6	4,4 - 5,3	58,0
100 m Coil in foil				
29202	29194	1 x 10	5,7 - 6,8	96,0
Drum				
26850	26842	1 x 16	6,7 - 8,1	154,0

Technical data

- PVC single core acc. to DIN VDE 0285-525-2-31 / DIN EN 50525-2-31 and IEC 60227-3
- Temperature range flexible -5°C to +70°C
  fixed installation -30°C to 80°C
- Nominal voltage U0/U 450/750 V
- Test voltage 2500 V
- Minimum bending radius fixed installation
  < 8 mm: 4x core outer Ø
  8-12 mm: 5x core outer Ø
  > 12 mm: 6x core outer Ø

Cable structure

- Bare copper conductor, finely stranded acc. to DIN VDE 0295 class 5, IEC 60228 class 5
- Core insulation: PVC compound type TI1 acc. to DIN VDE 0207-363-3 / DIN EN 50363-3 and IEC 60227-3
- Core identification, please see data sheet: www.helukabel.com/29129en

Application areas

For installation in electrical installation pipes either on or underneath plaster or in similar closed systems. Must not be used for direct laying on racks, troughs and tubes. Approved for the internal wiring of devices, distribution boards and switchgear, as well as for protected installation in and on lighting systems up to and including 1000 V AC or up to 750 V DC voltage.

Note

- **Other sizes, colours and packaging on request**

HELUCONTROL® PROFINET 24V POWER PVC /+ FE PVC

OEM listed

Technical data

- PVC-PROFINET power cable following DIN VDE 0285-525-2-11 / DIN EN 50525-2-11
- Temperature range: flexible -15°C to +80°C
  fixed installation -40°C to +80°C
- Nominal voltage: U_0/U: 300/500 V
- Minimum bending radius: flexible 7.5x conductor outer Ø
  fixed installation 4x conductor outer Ø

Cable structure

- Conductor: Bare copper conductor, finely stranded acc. to DIN VDE 0295 cl. 5 / IEC 60228 cl. 5
- Core insulation: Special PVC compound type Z 7225
- Core identification: 2 cores: BR (L1), BL (N1)
  3 cores: BR (L1), BL (N1), RS (FE)
  4 cores: BR (L1), BL (N1), BK (L2), WH (N2)
  5 cores: BR (L1), BL (N1), BK (L2), WH (N2), PK (FE)
- Outer sheath: PVC acc. to DIN VDE 0207-363-4-1 / DIN EN 50363-4-1 (compound type TM3)
- Sheath colour: grey (RAL 7001), with metre marking

Properties

- Flame retardant acc. to DIN VDE 0482-332-1-2 / DIN EN 60332-1-2 / IEC 60332-1-2
- Free of: silicone, cadmium, substances impeding paint adherence
- Extensive oil resistant

Application areas

- For flexible applications involving medium mechanical stress with free movement, without tensile stress and without forced movement under dry, damp or wet conditions, indoor use only.
- Used as a power supply to PROFINET components on machine tools, conveyer belts, production lines and in production plants.

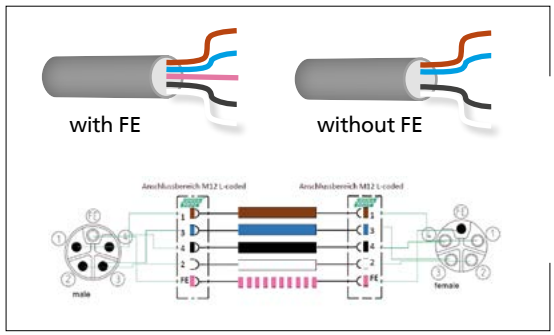

HELUCONTROL® PROFINET 24V POWER PVC

Part no.	No. cores x nom. cross-sec. mm²	Outer-Ø mm	Cu no. kg/km	Weight kg/km
17001197	2 x 0,75	5,3	14,4	46,0
17001198	2 x 1,5	6,4	29,0	70,0
17001199	2 x 2,5	7,8	48,0	112,0
17001203	4 x 0,75	6,3	28,8	66,0
17001204	4 x 1,5	7,6	58,0	109,0
17001205	4 x 2,5	9,2	96,0	178,0

HELUCONTROL® PROFINET 24V POWER + FE PVC

17001200	3 x 0,75	5,6	21,6	54,0
17001201	3 x 1,5	6,8	43,0	90,0
17001202	3 x 2,5	8,3	72,0	148,0
17001206	5 x 0,75	6,9	36,0	80,0
17001207	5 x 1,5	8,3	72,0	131,0
17001208	5 x 2,5	10,1	120,0	221,0

HELUCHAIN® PROFINET 24V POWER PVC /+ FE PVC

OEM listed

Technical data

- PROFINET-conforming, PVC drag chain cable acc. to DIN EN 60445 (VDE 0197)
- Temperature range: flexible 0°C to +90°C
  fixed installation -30°C to +90°C
- Nominal voltage: U_0/U: 300/500 V
- Minimum bending radius: flexible 12x conductor outer Ø
  fixed installation 4x conductor outer Ø

Cable structure

- Conductor: Bare copper wire, finely stranded acc. to DIN VDE 0295 class 5 / IEC 60228 class 5
- Core insulation: PVC acc. to DIN VDE 0207-363-3 / DIN EN 50363-3 (compound type TI3)
- Core identification: brown (L1), blue (N1), black (L2), white (N2), 5-core pink (FE)
- Fleece wrapping: min. 25 % overlap
- Outer sheath: PVC acc. to DIN VDE 0207-363-4-1 / DIN EN 50363-4-1 (compound type TM3)
- Sheath colour: PVC (without functional earthing conductor) black (RAL 9005), metre marking
  + FE PVC (with functional earthing conductor) grey (RAL 7001), metre marking

Properties

- Drag chain compatible: max. travel distance 10 m / max. speed 3 m/s
  max. acceleration 3m/s²/ max. cycles 2 million
- Free of: silicone, cadmium, substances impeding paint adherence
- Extensive oil resistant

Application areas

- In dry / damp rooms (not for outdoors)
- PROFINET-conforming, highly flexible, PVC drag chain cable
- In measurement and control technology for frequent lifting and bending stress in the automotive industry
- Machine and tool construction
- Permanently moving machine parts

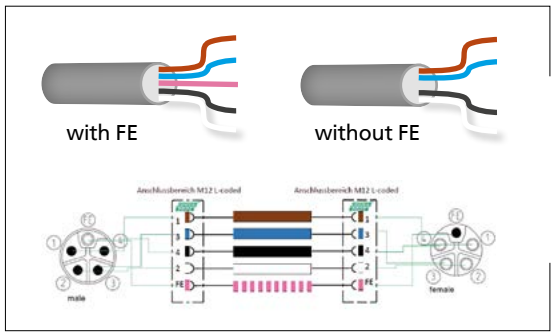

HELUCHAIN® PROFINET 24V POWER PVC

Part no.	No. cores x nom. cross-sec. mm²	Outer-Ø mm	Cu no kg/km	Weight kg/km
11008504	4 x 0,75	6,4	28,8	66,0
11008506	4 x 1,5	7,7	58,0	109,0
11008508	4 x 2,5	9,3	96,0	178,0

HELUCHAIN® PROFINET 24V POWER + FE PVC

11008505	5 x 0,75	7,0	36,0	80,0
11008507	5 x 1,5	8,4	72,0	131,0
11008509	5 x 2,5	10,2	120,0	221,0

HELUKABEL® INDUSTRIAL ETHERNET

BUS Cable

OEM listed

Part no. 800653 / 11018984

Part no. 800654 / 11018959

Part no. 802914 / 800655

Part no. 11007800

Part no. 82839

Part no. 801197

Part no. 805684

Part no. 802184

Part no. 80267

Part no. 81911

Ethernet standards for industrial automation	Application	Part no.	Sheath colour
PROFInet Type A PVC 2x2xAWG22/1 UL 600V	Fixed installation	800653	- green
PROFInet Type A PVC 2x2xAWG22/1 UL PLTC-ER 600V		11018984	- green
PROFInet Type B PVC 2x2xAWG22/7 UL 600V	Flexible application	800654	- green
PROFInet Type B PVC 2x2xAWG22/7 UL PLTC-ER 600V		11018959	- green
PROFInet Type C PVC 2x2xAWG22/7 UL 600V	Highly flexible & drag chain	802914	- green
PROFInet Type C PUR 2x2xAWG22/7 UL		800655	- green
PROFInet Type R PUR 2x2xAWG22/19 UL 1000V	Robot	11007800	- green
Industrial Ethernet Cat 5e EcoPUR 4x2xAWG26/19 UL 1000V	Highly flexible & drag chain	11007779	- green
Industrial Ethernet Cat 5e EcoPUR 4x2xAWG26/19 UL		82839	- green
Industrial Ethernet Cat 5e 4x2xAWG24/1 FRNC	Fixed installation	81609	- grey
Industrial Ethernet Cat 6 4x2xAWG26/19 UL 1000V	Highly flexible & drag chain	803387	- green
Industrial Ethernet Cat 6_A 4x2xAWG26/7 PUR UL 1000V		805548	- green
Industrial Ethernet Cat 7e Robust PUR 4x2xAWG23/1 UL 600V CC-Link IE	Fixed installation	801197	- green
Industrial Ethernet Cat 7_A Robustflex PUR 4x2xAWG26/7 UL 600V	Flexible application	805684	- green
Industrial Ethernet Cat 7 Robustflex FRNC 4x2xAWG26/7 UL		802184	- green
Industrial Ethernet Cat 7 Drag chain PUR 4x2xAWG24/7 UL 600V CC-Link IE	Highly flexible & drag chain	805614	- green
Industrial Ethernet Cat 7 Torsion PUR 4x2xAWG24/7 UL 600V	Robot	805828	- green

BUS standards for industrial automation			
Profibus L2 Drag chain PUR 1x2xAWG24/19	Highly flexible & drag chain	80267	- purple
Profibus SK Drag chain PUR 1x2xAWG24/19 UL		801659	- purple
Profibus SK Drag chain PUR 1x2xAWG24/19 UL		81906	- petrol
CAN 4x0,22 PVC Pairs	Fixed installation	82509	- purple
CAN 2x0,25 PUR	Highly flexible & drag chain	81911	- purple
CAN 4x0,25 PUR Star quad		81912	- purple

For further information, variants and dimensions, see data sheets under: www.helukabel.com/**999999**en

(replace the **red numbers** with the corresponding part no.)

Suitable connector

Part no. 805401

Part no. 805402

Part no. 11017443

Part no. 11017540

Part no. 11008569

Part no. 11008570

Part no. 11017766

Part no. 11017767

Part no. 805966 / 806206

Part no. 11007473

Connectors industry	Part no.
RJ45 PROFInet 4P Cat 5 IP20 metal centered UL	805401
RJ45 PROFInet 4P Cat 5 IP20 metal 90° angled UL	805402
RJ45 PROFInet 4P Cat 5 IP20 metal 145° angled UL	11017443
RJ45 PROFInet 8P Cat 6 IP20 metal centered UL	11017540
RJ45 PROFInet 4P Cat 5 IP67 metal centered Push Pull AIDA UL	11008569
Power connector PROFInet Power L 4P IP67 centered Push Pull AIDA UL	11008570
RJ45 8P Cat 6A IP20 metal centered (6,0mm-7,5mm AD) UL	11017885
RJ45 8P Cat 6A IP20 metal centered (7,0mm-8,5mm AD) UL	11017766
RJ45 8P Cat 8 IP20 metal centered UL	11017767
M12 D-coded 4P PROFInet IP67 metal AWG22-26 (4-8,0 mm AD) UL	805966
M12 X-coded 8P PROFInet IP67 metal AWG22-26 (5-9,7 mm AD) UL	806206
Connection module Ethernet Class FA IP67, AWG22-27 (strand) + AWM22-24 (massive)	11007473

NOTE:
Ethernet assemblies with moulded connectors for plug & play installation can be found:

https://www.helukabel.de/HELUKABEL/Publikationen/Flyer/Flyer_industrial_ethernet_EN.pdf

click or scan the QR code

EMC CABLE GLANDS

EMC-cable and earthing gland with integrated contact system for safe, quick assembly and contacting

HELUTOP® MS-EP

Part no.	Size PG	Cable-Ø from / to mm	Thread length mm	Spanner size mm	Unit pcs
99950	M12 x 1,5	3,0 - 6,5	6,0	14	50
99951	M16 x 1,5	5,0 - 10,0	7,0	20	50
99952	M20 x 1,5	6,0 - 12,0	8,0	22	50
99953	M25 x 1,5	11,0 - 17,0	8,0	27	25
99954	M32 x 1,5	15,0 - 21,0	9,0	34	25
99955	M40 x 1,5	19,0 - 28,0	9,0	43	20
99956	M50 x 1,5	27,0 - 38,0	9,0	58	5
99957	M63 x 1,5	34,0 - 44,0	14,0	64 / 68	5

Technical data
- Protection classification: IP 68 - 5 bar
- Temperature range: -20°C to +100°C
- Test standard: EN 62444

Material
- Brass, nickel plated
- Contact system: Copper-Beryllium
- Terminal insert: Polyamid PA 6
- Moulded seal: Chloroprene Rubber (CR)
- O-Ring: NBR

Properties
- Optimum strain relief through clamping plates
- No shield damage when assembling or disassembling rotating spring washers in the contact system
- Contact made automatically when the gland is closed
- Excellent shield damping and current deflection
- Reduced installation time and costs

HELUTOP® MS-EP4

Part no.	Size PG	Cable-Ø from / to mm	Thread length mm	Spanner size mm	Unit pcs
905181	M12 x 1,5	3,0 - 6,5	6,0	14	50
905182	M16 x 1,5	5,0 - 10,0	6,0	20	50
905183	M20 x 1,5	6,0 - 12,0	6,0	22	50
905184	M20 x 1,5	7,5 - 14,0	8,0	24 / 26	50
905185	M25 x 1,5	10,0 - 18,0	8,0	30	25
905186	M32 x 1,5	16,0 - 25,0	9,0	40	10
905187	M40 x 1,5	22,0 - 32,0	9,0	50	5
905188	M50 x 1,5	30,0 - 38,0	9,0	58	5
905189	M63 x 1,5	34,0 - 44,0	14,0	64 / 68	5
905248	M63 x 1,5	37,0 - 53,0	10,0	75	5

Technical data
- Protection classification: IP 68 - 5 bar
- Temperature range: -20°C to +100°C

Material
- Brass, nickel plated
- Contact system: Copper-Beryllium
- Terminal insert: Polyamid PA 6
- Moulded seal: Chloroprene Rubber (CR)
- O-Ring: NBR

Properties
- Optimal strain relief with clamping plates
- No shield damage when assembling or disassembling rotating spring washers in the contact system
- Reduced installation time and costs
- Contact made automatically when the gland is closed
- Excellent shield damping and current deflection
- Gentle contact of the springs on the shielding braid due to an extensive contact system area
- Best vibration strength

Suitable EMC lock nuts available on request.

Contact

Our product experts are available to answer your questions and provide customised solutions:

Günter Ehrentreich
Area Sales Manager
Key Account BMW, AUDI
guenter.ehrentreich@helukabel.de

RS/POTENTIAL EARTHING CONCEPT/10.2023/1000/EN/VP

HELUKABEL®

Channeling POWER

www.helukabel.com